GENERAL CHARACTERISTICS

These level switches, with their reduced dimensions and simplicity of installation, constitute a reliable solution for the control of liquids in all applications where it is necessary to mount a lateral type. Suitable for use with process temperature up to 180 ° C.

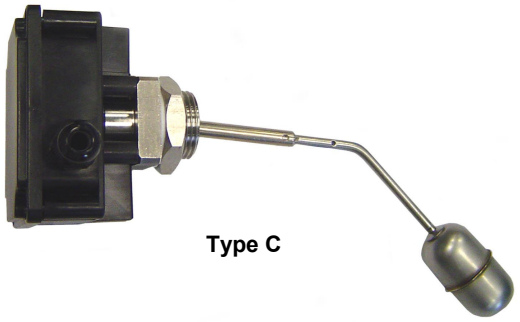

Type C

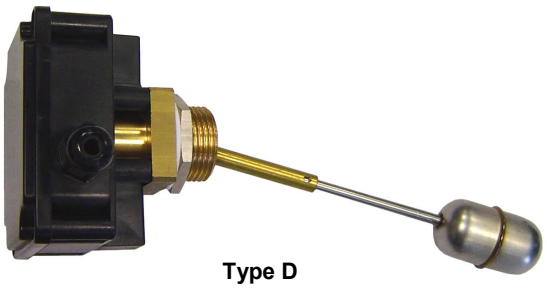

Type D

- 1 or 2 microswitches.
- Supporting adjustable float-rod
- Executions in Brass and AISI-316
- Maximum working pressure 25 bar
- Operating ambient temperature -30 /+55 °C - 90% RH
- Maximum working temperature 180 °C
- Degree of protection IP65

TECHNICAL DATA Tab.1

Process connection Ø	DN	Float - S50 S.G.	Max. pressure Bar	Max. temperature °C	Hysteresis mm	Weight g
1”	**25**	0,7	25	180	max. 20	440

Male thread	
G	
Parallel UNI 228/1	

Body materials	
O	**S**
Brass	AISI-316

Float materials	
S50	**Rod**
AISI-316	AISI-303

ELECTRICAL CONTACTS Tab.2

TYPE Microswitch	L1 = N.1 L2 = N.2	VOLTAGE AC	DC	CURRENT AC	DC
SPDT	**7**	250V	48V	3A (cosφ=1)	3A

Wiring

I	3
Independent Separately wired microswitches	SPDT Changeover contacts

ELECTRICAL OUTPUT Tab.3

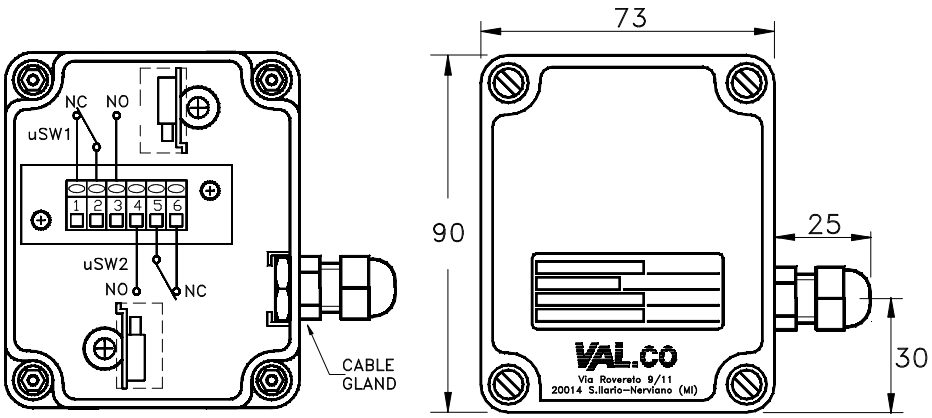

W
IP65 Housing PA6 + glass fiber
6 terminals Polyamide cable gland PG9

SWITCH POINTS TYPE C ROD Tab.4

Switch points of the microswitches reported to the mechanical axis of the instrument with liquid having S.G. = 1

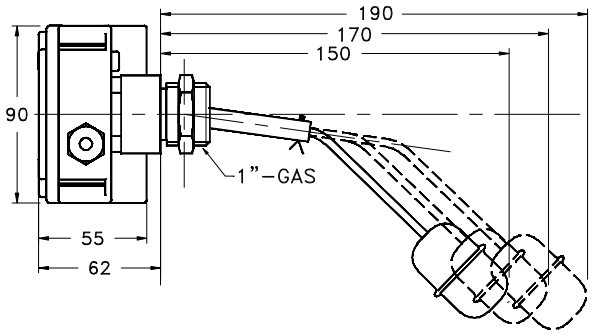

Rod length	Microswitch 1		Microswitch 2	
	ON	OFF	ON	OFF
Long	- 46	- 63	- 32	- 49
Medium	- 48	- 61	- 34	- 47
Short	- 50	- 60	- 36	- 46

General tolerances on the switch points ±5 mm.
All measurements are in mm.

SWITCH POINTS TYPE D ROD Tab.5

Switch points of the microswitches reported to the mechanical axis of the instrument with liquid having S.G. = 1

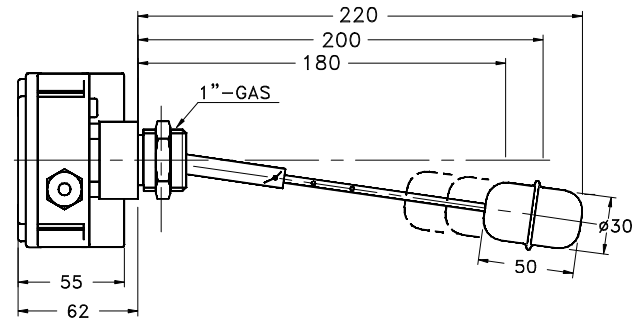

Rod length	Microswitch 1		Microswitch 2	
	ON	OFF	ON	OFF
Long	0	- 20	+ 20	0
Medium	0	- 18	+ 18	0
Short	0	- 16	+ 16	0

General tolerances on the switch points ±5 mm.
All measurements are in mm.

ASSEMBLY AND INSTALLATION

Float assembly

- Remove the blocking pin from the rod of the float.
- Insert the rod of the float into the pipe and block it with the pin.
- The float can have 3 different positions depending on the tank and the desired switch point.
- **Caution:** To avoid any type of damage to the float, during assembly, work always holding the rod, not the float itself.

Installation of the instrument in the tank

- Always insert the PTFE sealing gasket between the level control and the tank.
- **Caution:** During installation, handle the level switch only by the electrical head without forcing the float.

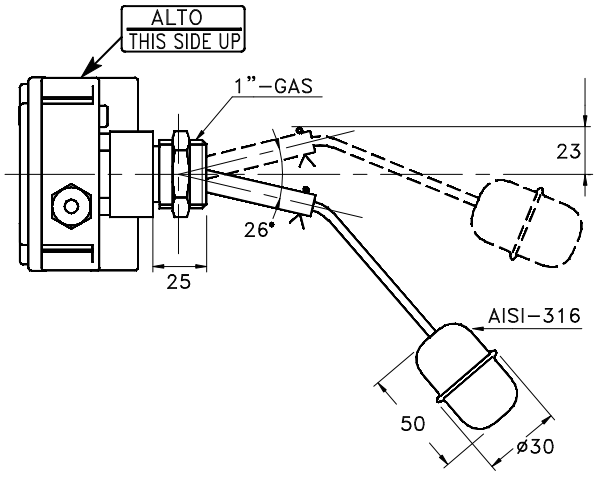

NOMENCLATURE

L2	S50	7	C	25	G	O	W	I33		
•									Tab.2	Number of electrical contacts L1÷ L2
	•								Tab.1	Float
		•							Tab.2	Type of the contacts
			•						Tab.4-5	Type of the rod
				•					Tab.1	Process connection dimension
					•				Tab.1	Process connection thread
						•			Tab.1	Process connection material
							•		Tab.3	Electrical output
								•	Tab.2	Wiring and contact status